Ersatzteilliste
Spare parts list
Liste des pièces de rechange

Lista parti di ricambio
Onderdelenlijst
Lista de repuestos

6720816989
(2015/05) Ri

P750/1S, PL750 - PL1500

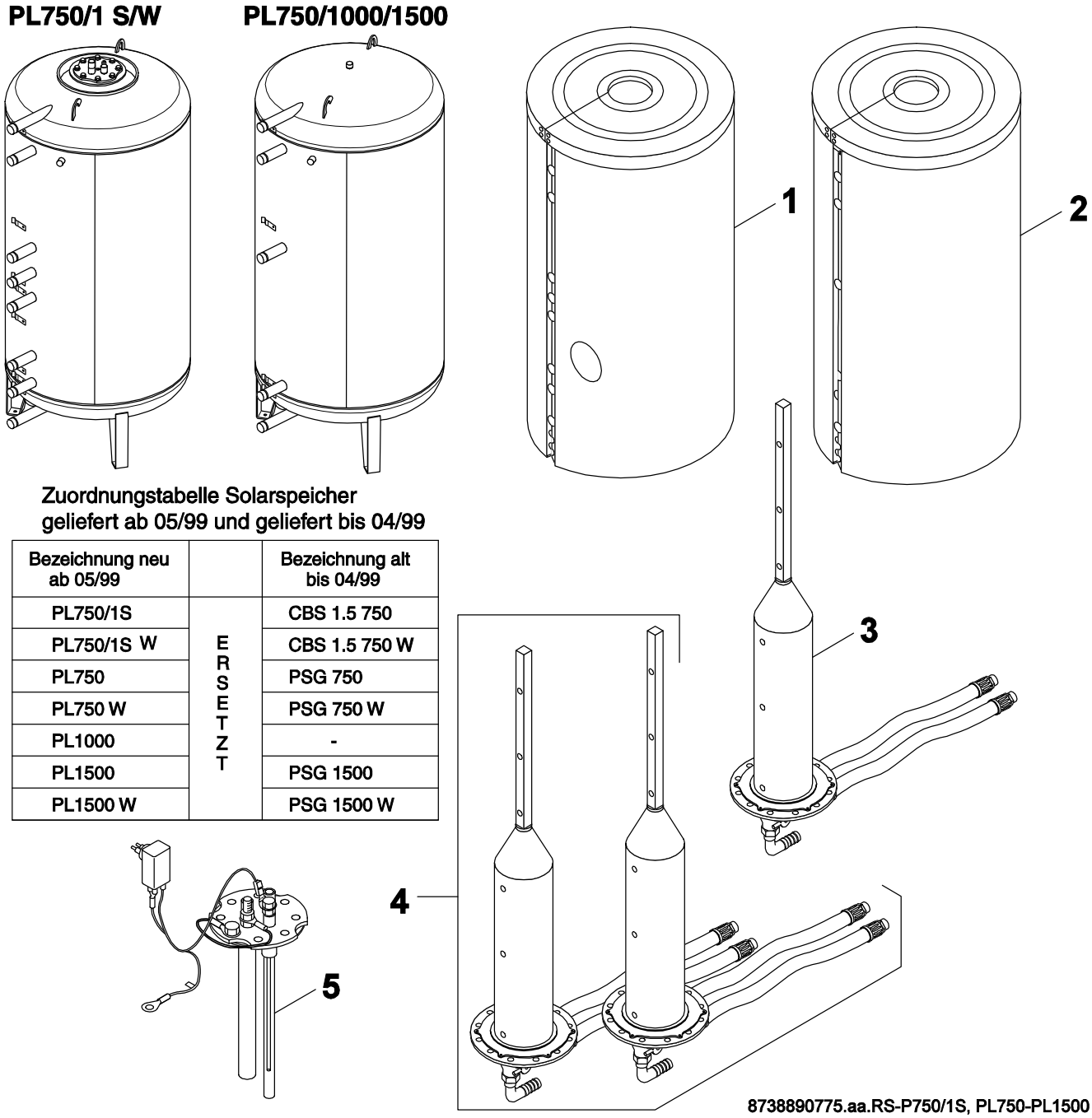

Zuordnungstabelle Solarspeicher
geliefert ab 05/99 und geliefert bis 04/99

Bezeichnung neu ab 05/99		Bezeichnung alt bis 04/99
PL750/1S	ERSETZT	CBS 1.5 750
PL750/1S W		CBS 1.5 750 W
PL750		PSG 750
PL750 W		PSG 750 W
PL1000		-
PL1500		PSG 1500
PL1500 W		PSG 1500 W

Buderus

[de] Wichtige Hinweise zur Installation/Montage

Die Installation/Montage muss durch eine für die Arbeiten zugelassene Fachkraft unter Beachtung der geltenden Vorschriften erfolgen.

[en] Important notes on installation/assembly

The installation/assembly must be carried out by a professional who is authorised to do the work, and with due regard to the relevant regulations.

[fr] Instructions importantes pour l'installation/le montage

L'installation/le montage doit être effectué(e) par un spécialiste qualifié pour les opérations concernées et dans le respect des prescriptions applicables.

[bg] Важни указания във връзка с инсталацията/монтажа

Инсталацията/монтажът трябва да се извършва от лицензиран за работите специалист в съответствие с приложимите разпоредби.

[cs] Důležité pokyny k instalaci/montáži

Instalaci/montáž musí při dodržení platných předpisů provést odborný pracovník s příslušným oprávněním pro tyto práce.

[da] Vigtige anvisninger til installationen/monteringen

Installationen/monteringen skal foretages af en godkendt installatør under overholdelse af de gældende forskrifter.

[el] Σημαντικές υποδείξεις για την εγκατάσταση/συναρμολόγηση

Η εγκατάσταση/συναρμολόγηση πρέπει να πραγματοποιείται από εξουσιοδοτημένο για τις εργασίες αυτές τεχνικό προσωπικό, το οποίο θα πρέπει να φροντίζει ώστε να τηρούνται οι ισχύουσες διατάξεις.

[es] Indicaciones importantes para instalación/montaje

La instalación/el montaje lo debe realizar personal especializado autorizado para los trabajos, respetando las prescripciones vigentes.

[et] Olulised juhised paigaldamiseks/montaažiks

Paigaldamist/montaaži tohib läbi viia selleks volitusi omav spetsialist, arvestades kehtivaid nõudeid.

[fl] Belangrijke aanwijzingen betreffende de installatie/montage

De installatie/montage moet worden uitgevoerd door een voor de werkzaamheden geautoriseerde installateur. Hij moet rekening houden met de geldende voorschriften.

[fi] Tärkeitä asennus- ja kokoonpano-ohjeita

Näihin töihin hyväksytyn ammattiasentajan pitää suorittaa asennus- ja kokoonpanotyöt voimassa olevien määräysten mukaisesti.

[hu] Fontos tudnivalók az installáláshoz/szereléshez

Az installálást/szerelést egy, a munkákra felhatalmazott szakembernek kell végeznie, az érvényes előírások figyelembevételével.

[it] Avvertenze importanti per l'installazione/il montaggio

L'installazione/il montaggio deve aver luogo ad opera di una ditta specializzata ed autorizzata in osservanza delle disposizioni vigenti.

[he] მნიშვნელოვანი მითითებები ინსტალაციისთვის/მონტაჟისათვის

ინსტალაცია/მონტაჟი უნდა განხორციელდეს სამუშაოებისთვის დაშვებული კვალიფიციური პერსონალის მიერ, მოქმედი განაწესის დაცვით.

[lt] Svarbios instaliavimo ir (arba) montavimo nuorodos

Instaliuoti ir montuoti, laikantis galiojančių taisyklių, leidžiama kvalifikuotiems specialistams, kurie buvo įgalioti šiems darbams atlikti.

[lv] Svarīgi norādījumi par iekārtas uzstādīšanu / montāžu

Iekārtas uzstādīšanu/montāžu ir jāveic specializētam sertificētam speciālistam, ievērojot spēkā esošos noteikumus.

[nl] Belangrijke aanwijzingen betreffende de installatie/montage

De installatie/montage moet worden uitgevoerd door een voor de werkzaamheden geautoriseerde installateur rekening houdend met de geldende voorschriften.

[no] Viktig informasjon om installasjon/montering

Installasjonen/monteringen skal gjennomføres av autoriserte installatører, og gjeldende forskrifter skal følges.

[pl] Ważne wskazówki dotyczące instalacji/montażu

Instalacja /montaż muszą być wykonane przez uprawnionego do tego rodzaju prac specjalistę przy zachowaniu obowiązujących przepisów.

[pt] Indicações importantes relativas à instalação/montagem

A instalação/montagem deve ser efetuada por um técnico especializado com qualificações para estes trabalhos, tendo em atenção os regulamentos em vigor.

[ro] Indicaţii importante privind instalarea/montajul

Instalarea/montajul trebuie realizate de către un specialist autorizat pentru lucrările respective, respectându-se prescripţiile valabile.

[ru] Важные указания по подключению/монтажу

Подключение/монтаж должны выполнять специалисты, имеющие допуск к выполнению таких работ, при соблюдении действующих норм и правил.

[sk] Dôležité pokyny týkajúce sa inštalácie/montáže

Inštaláciu/montáž musí realizovať odborník s oprávnením na výkon týchto prác, pričom musí dodržovať platné predpisy.

[sl] Pomembni napotki za namestitev/montažo

Namestitev/montažo mora izvesti strokovnjak, pristojen za tovrstna dela, ob upošte vanju veljavnih predpisov.

[sr] Važna uputstva za ugradnju i montažu

Ugradnju i montažu moraju da obave samo stručna lica ovlašćena za izvođenje takvih radova koja će poštovati važeće propise.

[sv] Viktiga anvisningar för installation/montering

Installationen/monteringen måste utföras av en behörig och fackkunnig person enligt gällande föreskrifter.

[tr] Kurulum/Montaj ile ilgili önemli uyarılar

Kurulum/Montaj çalışmaları sadece yetkili bayiler tarafından aşağıda belirtilen talimatlar dikkate alınarak yapılmalıdır.

[uk] Важливі вказівки щодо установки/монтажу

Установку/монтаж мають здійснювати фахівці, що мають дозвіл на проведення цих робіт, із дотримання чинних приписів.

[zh] 安装方面的重要提示

必须由受到许可承担该项工作的专业人员遵照相关法规进行安装。

[ar] ملاحظات هامة للتركيب/التجميع

يجب أن يتم التركيب/التجميع من قبل متخصص مصرح له بالعمل، مع مراعاة اللوائح السارية.

[fa] تذکرات مهم درباره نصب/مونتاژ

نصب/مونتاژ باید توسط فردی حرفه ای که مجاز به انجام این کار است، و همچنین با توجه کامل به مقررات مربوطه انجام شود.

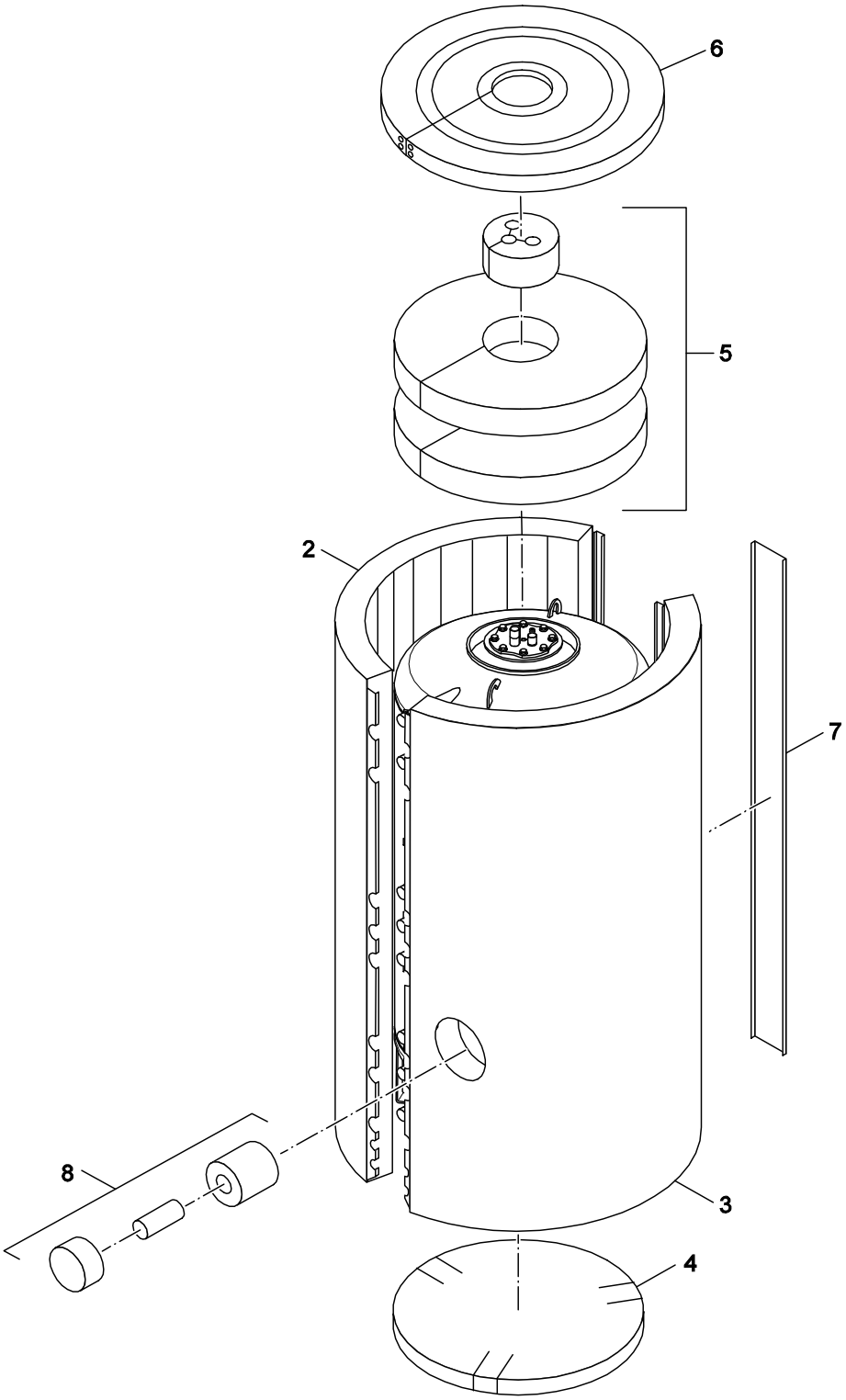

8738890776.aa.RS-Verkleidung PL750S/1S, PL750-PL1000

1	Verkleidung PL750S/1S, PL750-1000 Casing PL750S/1S, PL750-1000 Carénage PL750S/1S, PL750-1000 Rivestimento PL750S/1S, PL750-1000 Bekleding PL750S/1S, PL750-1000 Revestimiento PL750S/1S, PL750-1000	**P750/1S, PL750 - PL1500**

Pos	Bezeichnung Description Dénomination Descrizioni Benaming Descripción	Bestell-Nr. Ordering no. Numéro de commande N° d'ordine Bestelnummer Número el ordenar	PL750/1S/ PL750-1500																Bemerkungen Remarks Remarques Osservazioni Opmerkingen Observaciones
2	Wärmeschutz PSG/CBS 750 re blau	8 718 541 779 0	■																PL750 S /1S / PL750
2	Wärmeschutz 750 re weiss	8 718 541 783 0	■																PL750 S /1S / PL750
2	Wärmeschutz PL1000/2 S re blau	8 718 541 785 0	■																PL1000
2	Wärmeschutz PL1000 re weiss	8 718 541 789 0	■																
3	Wärmeschutz PSG/CBS 750 li blau	8 718 541 778 0	■																PL750 S /1S / PL750
3	Wärmeschutz 750 li weiss	8 718 541 782 0	■																PL750 S /1S / PL750
3	Wärmeschutz PL1000/2 S li blau	8 718 541 784 0	■																PL1000
3	Wärmeschutz PL1000 li weiss	8 718 541 788 0	■																
4	Wärmeschutz 750 Boden	8 718 541 780 0	■																PL750 S /1S / PL750
4	Wärmeschutz PL1000/2 S Boden	8 718 541 786 0	■																PL1000
5	Wärmeschutz 750 Deckel	8 718 541 781 0	■																PL750 S /1S / PL750
5	Wärmeschutz PL1000/2 S Deckel	8 718 541 787 0	■																PL1000
6	Abdeckung D1100x50mm Deckel	63012513	■																PL1000
6	Abdeckung D1000x70mm Deckel	67900786	■																PL750 S /1S / PL750
7	Abdeckleiste 750	67900787	■																PL750 S /1S / PL750-1000
8	Abdeckung E-Heizung 1000/2	63012517	■																PL1000
8	Abdeckung E-Heizung 750	67900767	■																PL750 S /1S / PL750

P750/1S, PL750 - PL1500

Verkleidung PL750S/1S, PL750-1000
Casing PL750S/1S, PL750-1000
Carénage PL750S/1S, PL750-1000
Rivestimento PL750S/1S, PL750-1000
Bekleding PL750S/1S, PL750-1000
Revestimiento PL750S/1S, PL750-1000

1

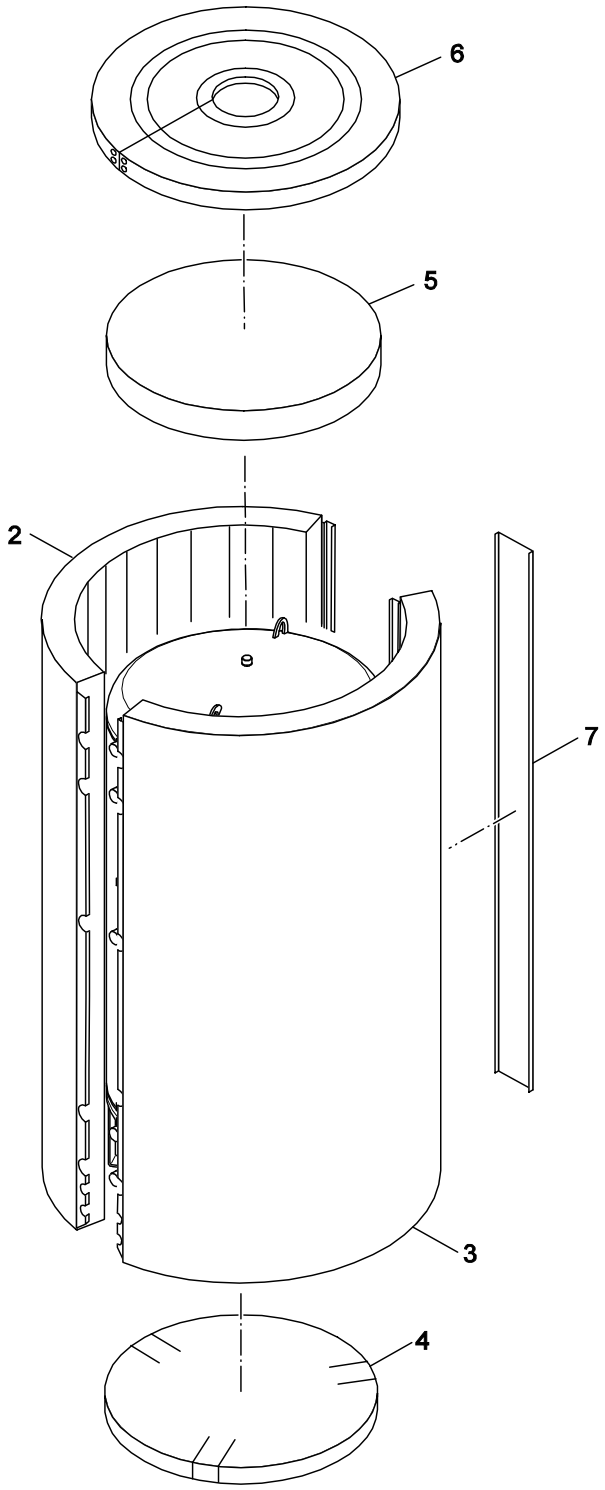

8738890777.aa.RS-Verkleidung PL1500

2	Verkleidung PL1500 Casing PL1500 Carénage PL1500 Rivestimento PL1500 Bekleding PL1500 Revestimiento PL1500	**P750/1S, PL750 - PL1500**

Pos	Bezeichnung Description Dénomination Descrizioni Benaming Descripción	Bestell-Nr. Ordering no. Numéro de commande N° d'ordine Bestelnummer Número el ordenar	PL750/1S/ PL750-1500																Bemerkungen Remarks Remarques Osservazioni Opmerkingen Observaciones
2	Wärmeschutz PSG1500 re blau	8 718 541 791 0	■																
3	Wärmeschutz PSG1500 li blau	8 718 541 790 0	■																
4	Wärmeschutz PSG1500 Boden	8 718 541 792 0	■																
5	Wärmeschutz PSG1500 Deckel	8 718 541 793 0	■																
6	Abdeckung D1420x70mm Deckel	67900843	■																
7	Abdeckleiste PSG 1500	67900846	■																

P750/1S, PL750 - PL1500

Verkleidung PL1500
Casing PL1500
Carénage PL1500
Rivestimento PL1500
Bekleding PL1500
Revestimiento PL1500

2

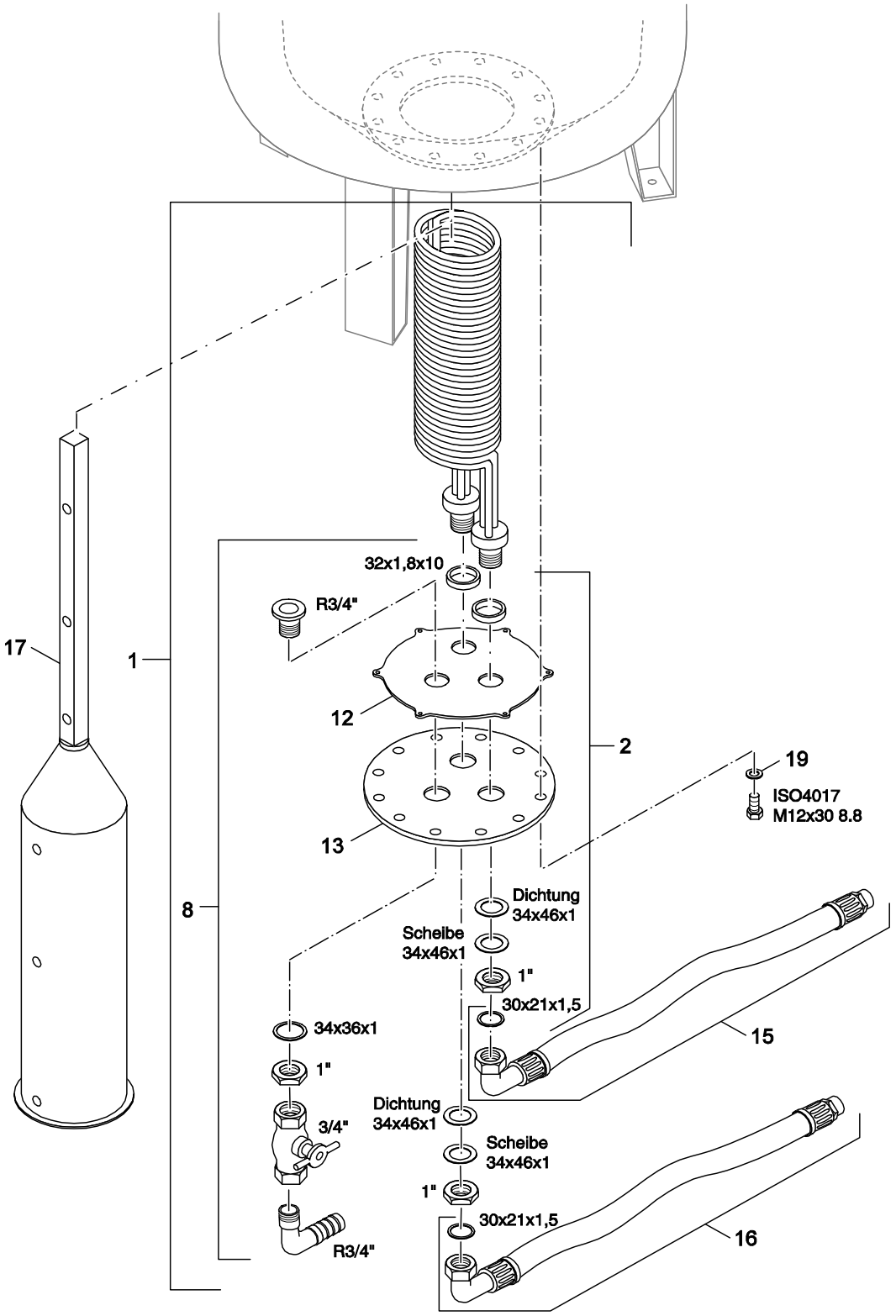

8738890778.aa.RS-Wärmetauscher PL750S/1S, PL750-PL1000

3

Wärmetauscher PL750S/1S, PL750-1000
Heat exchanger PL750S/1S, PL750-1000
Echangeur de chaleur PL750S/1S, PL750
Scambiatore di calore PL750S/1S, PL750
Warmtewisselaar PL750S/1S, PL750-1000
Intercambiador de calor PL750S/1S, PL750

P750/1S, PL750 - PL1500

Pos	Bezeichnung Description Dénomination Descrizioni Benaming Descripción	Bestell-Nr. Ordering no. Numéro de commande N° d'ordine Bestelnummer Número el ordenar	PL750/1S/ PL750-1500																Bemerkungen Remarks Remarques Osservazioni Opmerkingen Observaciones
1	WT 1,2qm mont 7-Rohr	63012508	■																PL1000
1	WT CBS mont 1,8qm	67900702	■																PL750 S / 1S
1	WT PSG mont 3,0qm	67900703	■																PL750
2	Rohrverschraubung Elektr Isoliert	67900713	■																
8	Entleerungs-Set THS	67900714	■																
12	Dichtung D259x4 f THS	67900699	■																
13	Handlochdeckel THS D280x10	67900705	■																
15	Anschlussschlauch 490mm blau	5177712	■																PL750 S /1S - PL750
15	Anschlussschlauch 540mm blau	63012506	■																PL1000
16	Anschlussschlauch 490mm rot	5177710	■																PL750 S /1S - PL750
16	Anschlussschlauch 540mm rot	63012507	■																PL1000
17	Wärmeleitrohr CBS 1.5 - 750	67900732	■																PL750 S /1S - PL750
17	Wärmeleitrohr PSG 750/1500	67900733	■																PL1000
19	Scheibe DIN125-A13-A3K (5x)	8 718 584 413	■																

P750/1S, PL750 - PL1500

Wärmetauscher PL750S/1S, PL750-1000
Heat exchanger PL750S/1S, PL750-1000
Echangeur de chaleur PL750S/1S, PL750
Scambiatore di calore PL750S/1S, PL750
Warmtewisselaar PL750S/1S, PL750-1000
Intercambiador de calor PL750S/1S, PL750

3

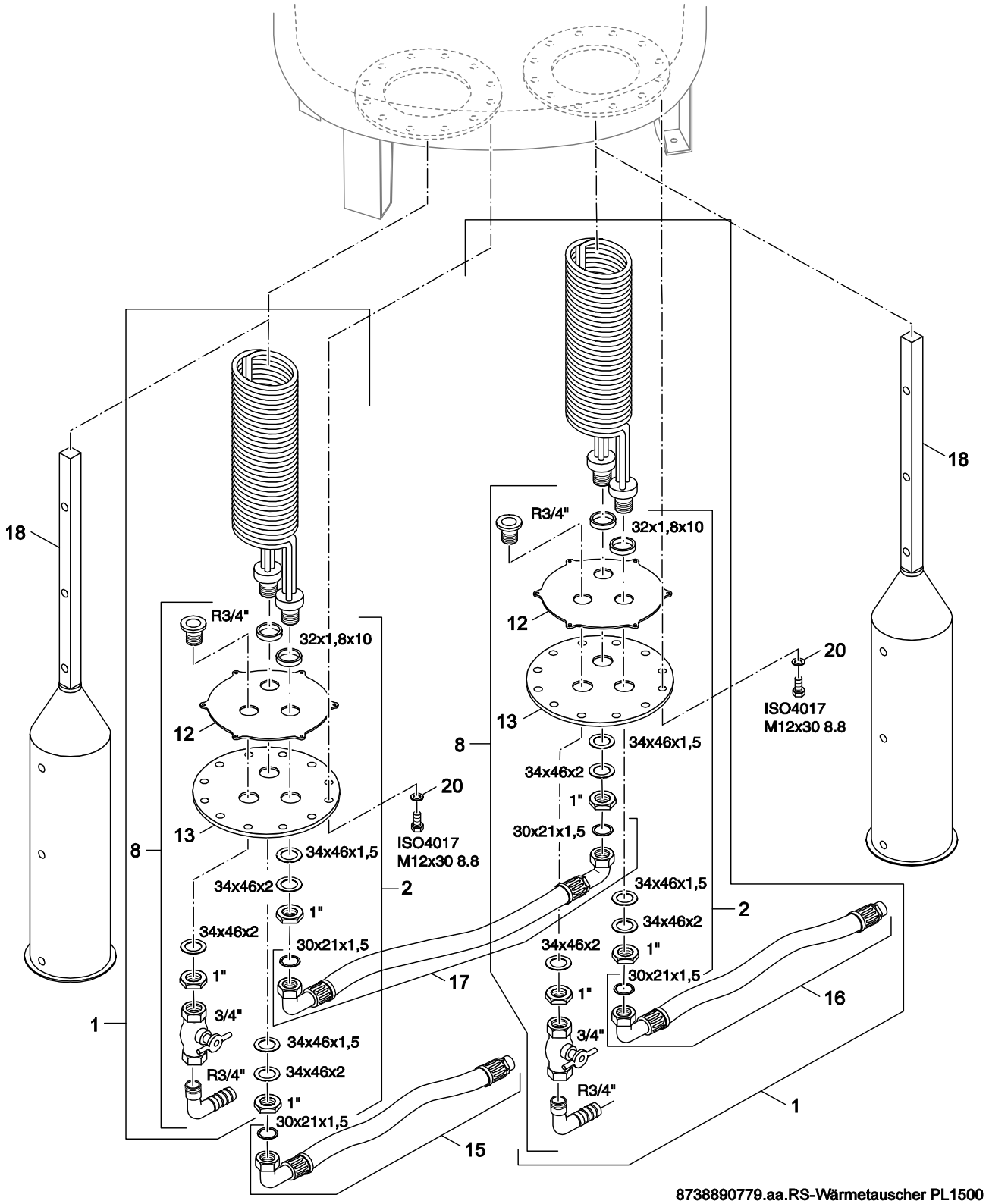

4

Wärmetauscher PL1500
Heat exchanger PL1500
Echangeur de chaleur PL1500
Scambiatore di calore PL1500
Warmtewisselaar PL1500
Intercambiador de calor PL1500

P750/1S, PL750 - PL1500

Pos	Bezeichnung Description Dénomination Descrizioni Benaming Descripción	Bestell-Nr. Ordering no. Numéro de commande N° d'ordine Bestelnummer Número el ordenar	PL750/1S/ PL750-1500																Bemerkungen Remarks Remarques Osservazioni Opmerkingen Observaciones
1	WT PSG mont 3,6qm	67900704	■																
2	Rohrverschraubung Elektr Isoliert	67900713	■																
8	Entleerungs-Set THS	67900714	■																
12	Dichtung D259x4 f THS	67900699	■																
13	Handlochdeckel THS D280x10	67900705	■																
15	Anschlussschlauch 720mm blau	5177716	■																
16	Anschlussschlauch 720mm rot	5177714	■																
17	Anschlussschlauch 240mm	5177718	■																
18	Wärmeleitrohr PSG 750/1500	67900733	■																
20	Scheibe DIN125-A13-A3K (5x)	8 718 584 413	■																

P750/1S, PL750 - PL1500

Wärmetauscher PL1500
Heat exchanger PL1500
Echangeur de chaleur PL1500
Scambiatore di calore PL1500
Warmtewisselaar PL1500
Intercambiador de calor PL1500

4

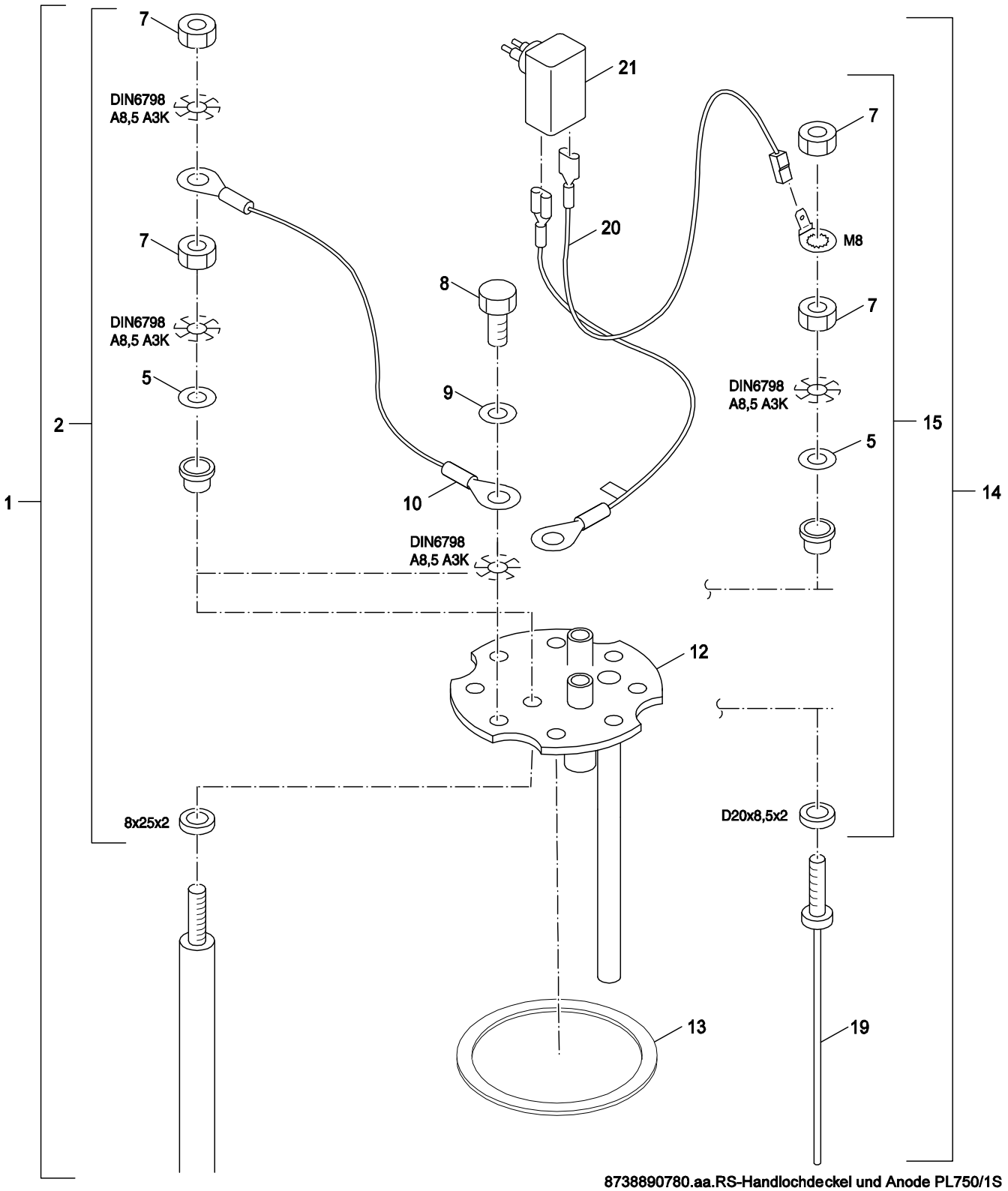

8738890780.aa.RS-Handlochdeckel und Anode PL750/1S

5	Handlochdeckel + Anode PL750/1S Hand hole cover + anode PL750/1S Trappe de visite + Anode PL750/1S Coperchio d'ispezione + Anodo PL750/1S Handgatdeksel + Anode PL750/1S Tapa de boca de hombre + anodo PL750/1S	**P750/1S, PL750 - PL1500**

Pos	Bezeichnung Description Dénomination Descrizioni Benaming Descripción	Bestell-Nr. Ordering no. Numéro de commande N° d'ordine Bestelnummer Número el ordenar	PL750/1S/ PL750-1500																Bemerkungen Remarks Remarques Osservazioni Opmerkingen Observaciones
1	Anode D33x400mm	8 718 571 568 0	■																
2	Anodenbefestigungs-Set (10x)	5264278	■																
5	Unterlegscheibe DIN125 A8,4 A3K (10x)	8 718 571 269 0	■																
7	6kt-Mutter ISO4032 M8 8 A3K	82585180	■																
8	Schraube ISO4017 M10x30 A3K (10x)	7 747 022 050	■																
9	Unterlegscheibe DIN125 10,5x2 (10x)	8 718 571 270 0	■																
10	Überwachung Mg-Anode	7079410	■																
12	Handlochdeckel	7 747 022 151	■																
13	Dichtring 120x152x10mm	63043454	■																
14	Fremdstromanode Correx UP Nr 10-19H/3	3868354	■																
15	Anodenbefestigungs-Set für Inert-An (5x)	3868384	■																
19	Inert-Anode 400mm lg mit Gewindestift M8	3868346	■																
20	Anschlussleitung Correx UP	63023625	■																
21	Steckerpotentiostat UP 19H	8 718 570 981 0	■																

P750/1S, PL750 - PL1500

Handlochdeckel + Anode PL750/1S
Hand hole cover + anode PL750/1S
Trappe de visite + Anode PL750/1S
Coperchio d'ispezione + Anodo PL750/1S
Handgatdeksel + Anode PL750/1S
Tapa de boca de hombre + anodo PL750/1S

5

Übersetzungsliste
List of translations

Liste des traductions
Traduzione delle descrizioni

Vertalinglijst
Lista de traducciones

Pos	Description	Denomination	Descrizione	Benaming	Descripción
1	**Element of construction**	**Groupe de construction**	**Gruppo di construzione**	**Montagegroep**	**Grupo de construccion**
2	Insulation PSG/CBS 750 right blue single	Isolation PSG/CBS 750 droite bleu	Coibentazione PSG/CBS 750 destra blu	Isolatie PSG/CBS 750 rechts blauw	Aislamiento PSG/CBS 750 derecha azul
2	Insulation 750 right white singl	Isolation 750 droite blanc	Coibentazione 750 destra bianco	Isolatie 750 rechts wit	Aislamiento 750 derecha blanc
2	Insulation PL1000/2 S right blue single	Isolation PL1000/2 S droite bleu	Coibentazione PL1000/2 S destra blu	Isolatie PL1000/2 S rechts blauw	Aislamiento PL1000/2 S derecha azul
2	Insulation PL1000 right white single pac	Isolation PL1000 droite blanc	Coibentazione PL1000 destra bianco	Isolatie PL1000 rechts wit	Aislamiento PL1000 derecha blanc
3	Insulation PSG/CBS 750 left blue single	Isolation PSG/CBS 750 gauche bleu	Coibentazione PSG/CBS 750 sinistra blu	Isolatie PSG/CBS 750 links blauw	Aislamiento PSG/CBS 750 izquierda azul
3	Insulation 750 left white single	Isolation 750 gauche blanc	Coibentazione 750 sinistra bianco	Isolatie 750 links wit	Aislamiento 750 izquierda blanc
3	Insulation PL1000/2 S left blue single p	Isolation PL1000/2 S gauche bleu	Coibentazione PL1000/2 S sinistra blu	Isolatie PL1000/2 S links blauw	Aislamiento PL1000/2 S izquierda azul
3	Insulation PL1000 left white single pack	Isolation PL1000 gauche blanc	Coibentazione PL1000 sinistra bianco	Isolatie PL1000 links wit	Aislamiento PL1000 izquierda blanc
4	Insulation 750 bottom single pac	Isolation 750 bas	Coibentazione 750 sotto	Isolatie 750 onder	Aislamiento 750 debajo
4	Insulation PL1000/2 S bottom single pack	Isolation PL1000/2 S bas	Coibentazione PL1000/2 S sotto	Isolatie PL1000/2 S onder	Aislamiento PL1000/2 S 750 debajo
5	Insulation 750 top single pack	Isolation 750 Couvercle	Coibentazione 750 Coperchio	Isolatie 750 Deksel	Aislamiento 750 Tapa
5	Insulation PL1000/2 S Deckel single pack	Isolation PL1000/2 S Couvercle	Coibentazione PL1000/2 S Coperchio	Isolatie PL1000/2 S Deksel	Aislamiento PL1000/2 S Tapa
6	Casing lid D1100x50mm black	Couvercle supérieur pour PL1000/2S/W	Coperchio rivestimento D1100x50mm nero	Afdekking D1100x50mm	Carcasa superior D1100x50mm negra
6	Casing lid D1000x70mm black	HABIL DESSUS D1000x70mm	Coperchio rivestimento D1000x70mm nero	Afdekkap D1000x70mm	Carcasa superior D1000x70mm negra PL750
7	Protective strip front 750	HABIL BAGUETTE PVC 750	Listello di copertura anteriore 750	Afdekstrook 750	Embellecedor frontal 750
8	Cover electric heater black 1000/2	Couvercle Chauff. électrique noir 1000/2	Coperchio Resistenza elettr. nero 1000/2	Afdekking Elektroverwarming 1000/2	Recubrimiento resistencia eléctr. 1000/2
8	Cover electric heater front 750	Couvercle Chauffage électrique 750	Copertura tetto Riscaldam elettrico 750	Afdekking Elektrische verwarming 750	Recubrimiento frontal resistencia 750
2	**Element of construction**	**Groupe de construction**	**Gruppo di construzione**	**Montagegroep**	**Grupo de construccion**
2	Insulation PSG1500 right blue single pac	Isolation PSG1500 droite bleu	Coibentazione PSG1500 destra blu	Isolatie PSG1500 rechts blauw	Aislamiento PSG1500 derecha azul
3	Insulation PSG1500 left blue single pack	Isolation PSG1500 gauche bleu	Coibentazione PSG1500 sinistra blu	Isolatie PSG1500 links blauw	Aislamiento PSG1500 izquierda azul
4	Insulation PSG1500 bottom single pack	Isolation PSG1500 bas	Coibentazione PSG1500 sotto	Isolatie PSG1500 onder	Aislamiento PSG1500 debajo
5	Insulation PSG1500 top single pack	Isolation PSG1500 Couvercle	Coibentazione PSG1500 Coperchio	Isolatie PSG1500 Deksel	Aislamiento PSG1500 Tapa
6	Casing lid D1420x70mm black PL1500	Couvercle d'habillage D1420x70mm noir	Copertura tetto D1420x70mm	Afdekking D1420x70mm	Carcasa superior D1420x70mm negra
7	Cover strips front PL1500	Barre de recouvrement pour PL1500	Listello di copertura anteriore PSG1500	Afdekstrook PSG1500	Embellecedor frontal PL1500
3	**Element of construction**	**Groupe de construction**	**Gruppo di construzione**	**Montagegroep**	**Grupo de construccion**
1	Heat exchanger 1,2qm	Echangeur 1,2qm compl.	Scambiatore di calore 1,2qm compl.	Warmtewisselaar 1,2qm	Intercambiador 1,2qm
1	Heat exchanger 1.8qm	Echangeur 1,8qm compl.	Scambiatore di calore 1,8mq completo	Warmtewisselaar 1,8qm	Intercambiador 1.8qm
1	Heat exchanger 3.0qm	Echangeur 3,0qm compl.	Scambiatore di calore 3,0mq completo	Warmtewisselaar 3,0qm	Intercambiador 3.0qm
2	Pipe screw connection	Raccord sonde sanitaire	Raccordo	Koppeling	Unión roscada
8	Draining set	KIT DE VIDANGE	KIT SCARICO COMPL. SL300/2	Drain-set	Set llenado / vaciado PL750 - PL1500
12	Gasket D259x4mm	Joint d259x4mm-SL300/500	Guarnizione D259x4mm	Boilerdichting 259x4 voor SL300/400/500	Junta D259x4 para Acumulador Termosifón
13	Manhole cover D280x10mm	COUVERCLE TRAPPE DE VISITE COMPL.	Coperchio d'ispezione D280x10mm	Boilerdeksel D280x10mm	Brida Inferior Acumulador Termosifón
15	Connection hose blue 490mm long	FLEXIBLE ALIM "BLEU" PL750/2S 490mm	FLESSIBILE BLU 490MM PER PL750	Slang blauw 490mm	Manguera roja 490mm
15	Connection hose blue 540mm long	Tuyau de raccordement bleu	Tubo flessibile blu 540mm	Slang blauw 540mm	Manguera azul 540mm
16	Connection hose red 490mm long	FLEXIBLE ALIM "ROUGE" PL750/2S 490mm	FLESSIBILE ROSSO 490MM PER PL750	Slang rood 490mm	Manguera roja 490mm
16	Connection hose red 540mm long	Tuyau de raccordement rouge	Tubo flessibile rosso 540mm	Slang rood 540mm	Manguera roja 540mm
17	Heat conductive pipe CBS 1.5 - 750	Tube de transfert de chaleur CBS 1.5 750	Tubo termoconduttore CBS 1.5 - 750	Warmte-geleidende buis CBS 1.5 - 750	Conductividad térmica del tubo CBS 1.5
17	Heat conductive pipe 750/1500	Tube de transfert de chaleur 750/1500	Tubo termoconduttore 750/1500	Warmte-geleidende buis 750/1500	Conductividad térmica del tubo 750/1500
19	Disc DIN125-A13-A3K (5x)	Rondelle DIN125-A13-A3K (5x)	Rondella DIN125-A13-A3K (5x)	Ring DIN125-A13-A3K (5x)	Arandela DIN125-A13-A3K (5x)
4	**Element of construction**	**Groupe de construction**	**Gruppo di construzione**	**Montagegroep**	**Grupo de construccion**
1	Heat exchanger 3.6qm	ECHANGEUR 3,6qm	Scambiatore 3.6qm PL1500	Warmtewisselaar 3.6qm	Intercambiador 3.6qm
2	Pipe screw connection	Raccord sonde sanitaire	Raccordo	Koppeling	Unión roscada
8	Draining set	KIT DE VIDANGE	KIT SCARICO COMPL. SL300/2	Drain-set	Set llenado / vaciado PL750 - PL1500
12	Gasket D259x4mm	Joint d259x4mm-SL300/500	Guarnizione D259x4mm	Boilerdichting 259x4 voor SL300/400/500	Junta D259x4 para Acumulador Termosifón
13	Manhole cover D280x10mm	COUVERCLE TRAPPE DE VISITE COMPL.	Coperchio d'ispezione D280x10mm	Boilerdeksel D280x10mm	Brida Inferior Acumulador Termosifón
15	Connection hose blue 720mm lg	FLEXIBLE ALIM "BLEU" PL1500 720mm	FLESSIBILE BLU 720MM PER PL750	Slang blauw 720mm	Manguera azul 720mm
16	Connection hose red 720mm lg	Tuyau frouge long. 720mm	FLESSIBILE ROSSO 720MM PER PL750	Slang rood 720mm	Manguera roja 720mm
17	Connection hose 240mm lg	Tuyau long. 240mm	Attacco Tubo flessibile 240mm lungh.	Slang 240mm	Manguera 240mm PL1500
18	Heat conductive pipe 750/1500	Tube de transfert de chaleur 750/1500	Tubo termoconduttore 750/1500	Warmte-geleidende buis 750/1500	Conductividad térmica del tubo 750/1500
20	Disc DIN125-A13-A3K (5x)	Rondelle DIN125-A13-A3K (5x)	Rondella DIN125-A13-A3K (5x)	Ring DIN125-A13-A3K (5x)	Arandela DIN125-A13-A3K (5x)
5	**Element of construction**	**Groupe de construction**	**Gruppo di construzione**	**Montagegroep**	**Grupo de construccion**
1	Anode D33x400mm	Anode magnes 33x400 mm v2	Anodo D33x400mm	Anode D33x400mm	Ánodo completo 33x400mm
2	Mounting kit magn.anodes insulated 10 pc	Fixation pour anode (10 pces)	Set di fissaggio anodi di magnesio (10x)	Bevestigingsset magnesiumanoden (10x)	Kit de montaje del Ánodo (10x)
5	Washer DIN125 A3K (10x)	Rondelle plate DIN125 A3K (10x)	Rondella DIN125 A3K (10x)	Onderlegring DIN125 A3K (10x)	Junta DIN 125 A8,4 A3K..
7	G234X/334X M8 NUT FOR BASE	Ecrou 6 pans ISO4032 M8 8 A3K	Dado esagonale ISO4032 M8 8 A3K	Zeskantmoer ISO4032 M8 8 A3K	Tuerca hexagonal ISO4032 M8 8 A3k
8	Screw ISO4017 M10x30 A3K (10X)	VIS ISO 4017 M10x30 A3K (10x)	Vite Iso 4017 M10x30 A3K (10x)	Schroef Iso 4017 M10x30 A3K (10x)	Tornillo Iso 4017 M10x30 A3K (10x)

Übersetzungsliste
List of translations

Liste des traductions
Traduzione delle descrizioni

Vertalinglijst
Lista de traducciones

Pos	Description	Denomination	Descrizione	Benaming	Descripción
9	Washer DIN125 10,5x2 (10x)	Rondelle plate DIN125 10,5x2 (10x)	Rondella DIN125 10,5x2 (10x)	Onderlegring DIN125 10,5x2 (10x)	Arandela DIN125 10,5x2 (10x)
10	Flue gas for magnesium anode	PRISE DE MASSE ANODE	Controllo per anodo di magnesio	Anode controlefiche	Cable medición ánodo de magnesio
12	Manhole cover	TRAPPE VISITE	Coperchio d'ispezione	Handgatdeksel	Brida Registro
13	Sealing ring 120x152x10mm	Joint etancheite 120x152x10mm	Anello di tenuta 120x152x10mm	Afdichtring 120x152x10mm	Junta D120x152x10mm brida registro acumu
14	Inert anode UP 400mm	Anode inerte UP400 avec branch	Anode inerte UP400	Inertanode met aansluitstekker	Anodo inerte Correx UP 10-19-H7
15	Mounting kit inert anodes (5 pack)	Fixation Anode Inerte (5x)	Materiale per il Montaggio Anodo (5x)	Bevestigingsset inertanoden	Material de Montaje Ánodo inerte (5x)
19	Inert anode 400mm with Threaded stud M8	Anode inerte 400mm avec Tige filetée M8	Anodo inerte con Perno filettato M8	Inertanode 400mm met Draadstift M8	Ánodo inerte 400mm con rosca M8
20	Connecting cable Correx UP	Conduite de raccordem.Correx UP	Cavo di collegamento Correx UP completo	Aansluitkabel 3500mm voor UP19H (050)	Cable de conexión Correx UP
21	Connector potentiostat UP 19H AMP plug	Potentiostat # connecteur UP 19H	Potenziostato connettore UP 19H	Potentiostaat UP 19H	Enchufe UP 19H

Gerätetypen Types of appliances	Types de chaudieres Tipo apparecchi	Toesteltypes Tipos de aplicaciones	
Gerät Appliance Chaudière Apparecchio Toestel Aparato	Bestell-Nr. Ordering no. Numéro de commande N° d'ordine Bestelnummer Número el ordenar	Land Country Pays Paese Land Paese	Bemerkungen Remarks Remarques Osservazioni Opmerkingen Observaciones
P750/1S, PL750-1500	99909063	Deutschland,Italien,Kroatien,Polen,Russl	

Bosch Thermotechnik GmbH
D-35576 Wetzlar / Germany

Buderus